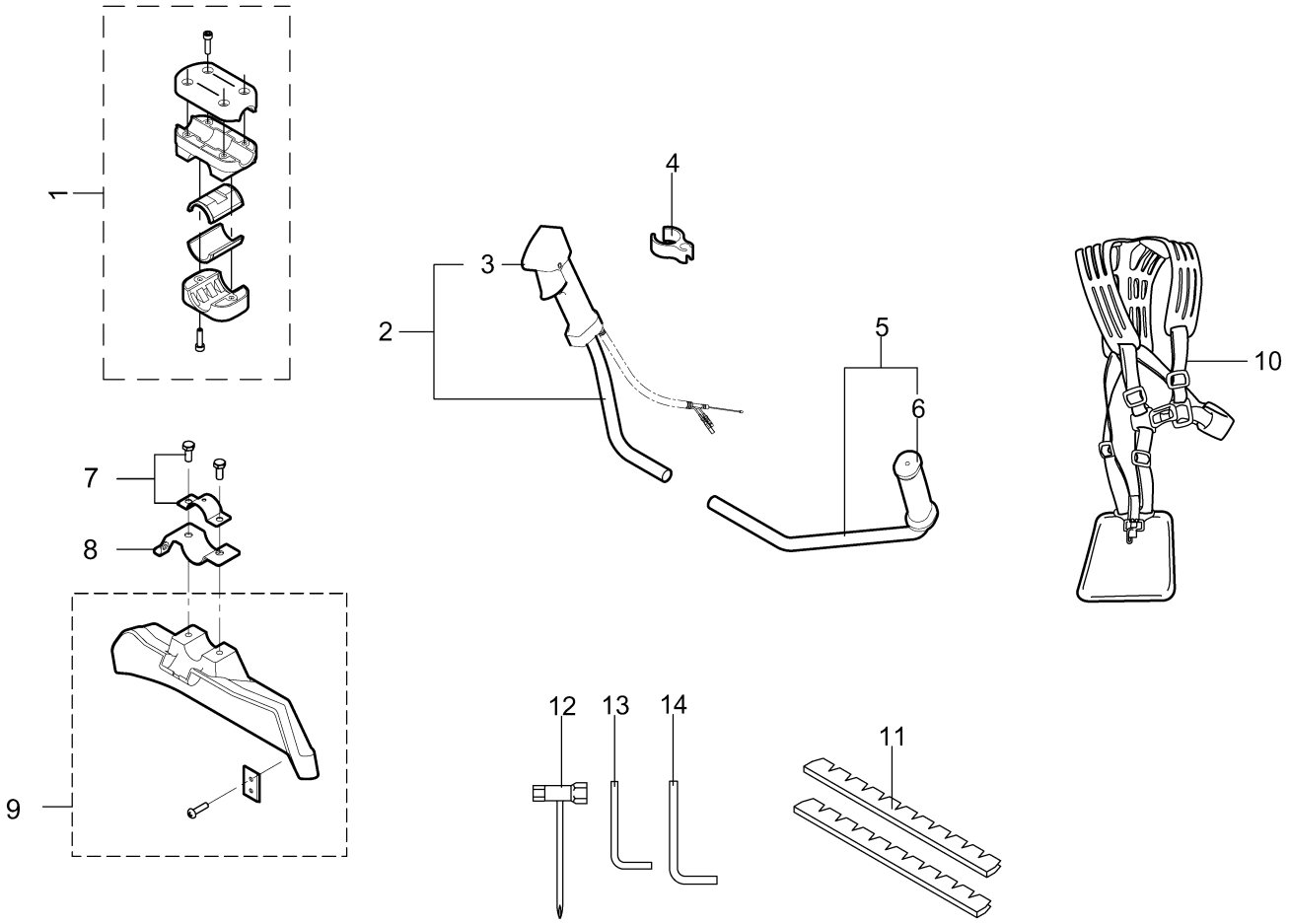

46011-441	'04.06.21	2/2

REF. No.	PARTS NO.			PARTS NAME	Q'TY	INCLUDING					REMARKS
1	71011	150	65	HANDLE JOINT ASS'Y	1						
2	71014	346		HANDLE ASS'Y	1						
3	71056	225		THROTTLE LEVER ASS'Y		1					
4	51002	110		WIRE HOLDER	2						
5	71014	345		HANDLE ASS'Y	1						
6	36007	154		HANDLE GRIP		1					
7	71038	169		SAFETY GUARD BAND SET	1						
8	11029	137		SAFETY GUARD BAND	1						
9	71303	103		SAFETY GUARD SET	1						
10	36063	152		SHOULDER BAND	1						
11	36044	107		BLADE COVER	1						
12	66006	117		BOX SPANNER	1						17×19
13	66007	103		L WRENCH	1						4
14	66007	104		L WRENCH	1						5

VS450(W)

Gear case and Driving apparatus

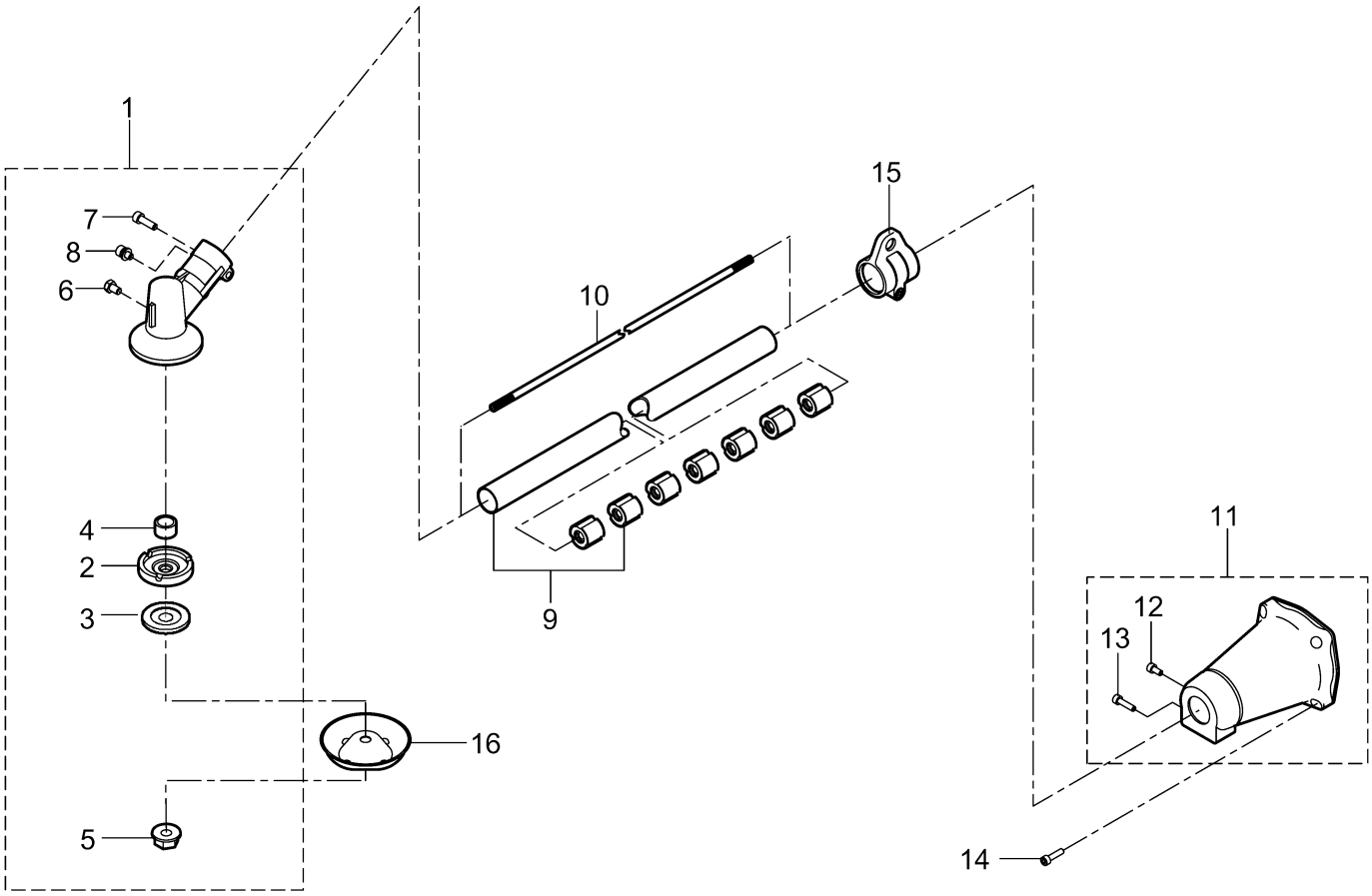

46011-441	'04.06.21	1/2

REF. No.	PARTS NO.			PARTS NAME	Q'TY	INCLUDING					REMARKS
1	71008	319		GEAR CASE ASS'Y	1						
2	11001	148		HOLDER(A)		1					
3	11002	115		HOLDER(B)		1					
4	61001	121		SPLINE SLEEVE		1					
5	31001	106		SAW LOCK NUT		1					
6	322N	0810		(+)HEXAGON BOLT		1					M8×10
7	412N	0620		SOCKET SCREW		1					M6×20
8	413N	0515		SOCKET SCREW (W/SW)		1					M5×15
9	71130	168		MAIN PIPE C.P.	1						
10	64011	230		MAIN SHAFT	1						
11	71010	245	65	CLUTCH CASE ASS'Y	1						
12	413N	0515		SOCKET SCREW (W/SW)		1					M5×15
13	412N	0630		SOCKET SCREW		1					M6×30
14	412N	0620		SOCKET SCREW	4						M6×20
15	71012	138		HANGER ABND ASS'Y	1						
16	11027	119		STABILIZER	1						

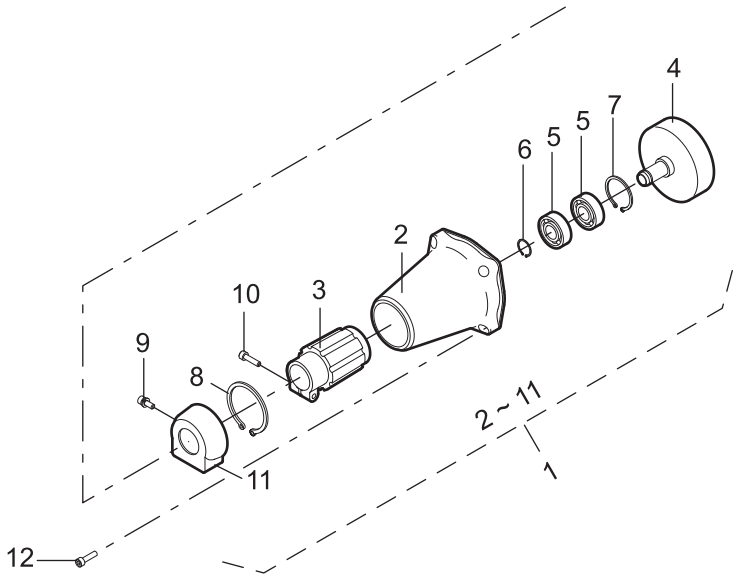

46014-621-00

					CLUTCH CASE ASS'Y					1/1		17.Apr, 2008
REF. No.	PARTS No.			PARTS NAME	Q'TY	INCLUDING			PRICE( )	RECOMM.(%) Lot.100		REMARKS
1	71010	270	104	CLUTCH CASE ASS'Y	1							
2	51030	187	104	CLUTCH CASE		1						
3	51119	118		INSERT RING C.P.		1						
4	11014	211		CLUTCH DRUM C.P.		1						
5	912B	6202		BEARING		2						6202 ZZ
6	812V	1500		C-SNAP RING		1						ϕ15 (FOR SHAFT)
7	811V	3500		C-SNAP RING		1						ϕ35 (FOR HOLE)
8	813V	4800		R-SNAP RING		1						ϕ48 (FOR HOLE)
9	413N	0515		SOCKET SCREW (W/SW)		1						M5×15 (SW)
10	412N	0630		SOCKET SCREW		1						M6×30
11	36065	469		COVER		1						
12	412N	0620		SOCKET SCREW	4							M6×20

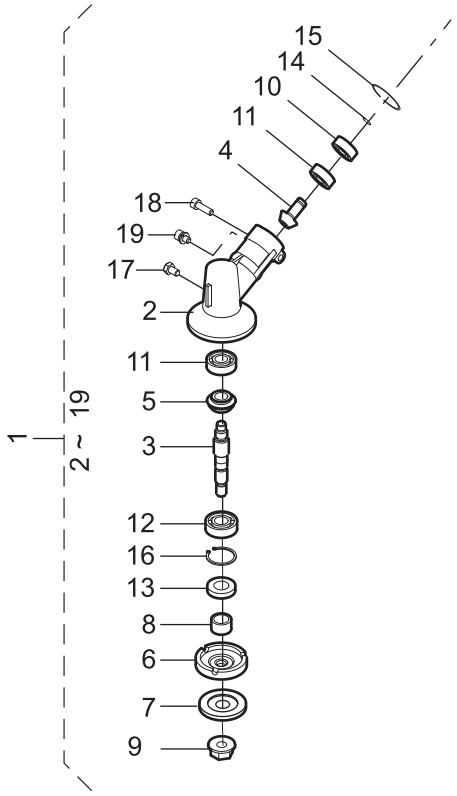

PARTS LIST

46014-273-00

					GEAR CASE ASSY					1/1		01. Apr, 2008
REF. No.	PARTS No.			PARTS NAME	Q'TY	INCLUDING			PRICE( )	RECOMM.(%) Lot.100		REMARKS
1	71008	319		GEAR CASE ASS'Y	1							
2	51001	266		GEAR CASE		1						
3	64001	140		SPLINE SHAFT		1						
4	78002	173		BEVEL PINION		1						
5	78001	153		BEVEL GEAR		1						
6	11001	148		HOLDER(A)		1						
7	11002	115		HOLDER(B)		1						
8	61001	121		SPLINE SLEEVE		1						
9	31001	106		SAW LOCK NUT		1						
10	912B	6001		BEARING		1						6001 ZZ
11	913B	6001		BEARING		2						6001 OP
12	919B	6202		BEARING		1						6202 OPC3
13	61002	107		OIL SEAL		1						TC 20 35 7
14	812V	1200		C-SNAP RING		1						ϕ12
15	811V	2800		C-SNAP RING		1						ϕ28
16	811V	3500		C-SNAP RING		1						ϕ35
17	322N	0810		(+)HEXAGON BOLT		1						M8x10
18	412N	0620		SOCKET SCREW		1						M6x20
19	413N	0515		SOCKET SCREW(W/SW)		1						M5x15(SW)